Bobcat®

TR45190

Telescopic Handlers

TR45190

Specifications

Performance

Lifting height — on stabilisers	18700 mm
Lifting height — on tyres	18400 mm
Rated capacity	4500 kg
Capacity (at max. height — on stabilisers)	3000 kg
Capacity (at max. height — on tyres)	1200 kg
Capacity (at max. reach — on stabilisers)	500 kg
Capacity (at max. reach — on tyres)	400 kg
Max. reach — on stabilisers	16400 mm
Max. reach — on tyres	12200 mm

Weights

Weight (unladen)	16400 kg

Traction

Standard tyres	18 — R22.5in
Low speed (forward/reverse)	10 km/h
High speed (forward/reverse)	40 km/h

Drive System

Transmission	Hydrostatic with hydraulic regulation
Main drive	2-speed gear box

Engine

Make/Model	PERKINS / 1104D-ETA
Fuel / Cooling	Diesel / Liquid
Rated power (DIN 6271) at 2200 RPM	106 kW (144 HP)
Maximum torque at 1400 RPM	556 Nm
Number of cylinders	4
Displacement	4.4 l

Hydraulic System

Pump type	Double gear pump
Working pressure	230 bar

Function Time

Lift time — no load	18.0 s
Lower time — no load	13.0 s
Telescope in time at max. reach — no load	21.0 s
Telescope in time at max. height — no load	16.0 s
Telescope out time at max. reach — no load	28.0 s
Telescope out time at max. height — no load	27.0 s

Brakes

Engine braking	Hydrostatic
Parking brake	Negative brake with electro-hydraulic command on rear axle

Fluid Capacities

Axles and reduction gears front/rear	10 / 10 l
Engine oil	9 l
Fuel tank	180 l
Hydraulic reservoir	270 l

Standard Features

Man platform ready
Hydrostatic transmission
Two way hydraulic supply at the end of the boom
Back-up alarm
Boom stop
Lockable fuel cap
Heating, demisting and ventilation
Carriage with manual attachment lock
ROPS/FOPS operator cab
Front and rear washer/wipers
Suspension seat
Road lights

Options

Special painting
Pneumatic seat (compulsory with double joystick)
Carriage with hydraulic attachment lock
Controls with double joystick
TÜV homologation
Remote control
Second auxiliary hydraulic line with electrical line
Work light on top of cabin
Air conditioning
Boom light
Radio
Radio with CD player
Protective grill for windshield
Limited slip differential for rear axle
Electric contact on boom head
Sun visor
Wheel alignment indicator
Cold weather kit
Cold start (engine water heater)
Webasto heater (Cold weather kit is compulsory)
Digital speedometer and odometer
Pallet fork transversal block
Anti-theft immobiliser
Catalytic exhaust purifier
Centering handler and positive/negative jib pre-arrangement
Spare wheel 22.5in
Stabilizer security 30 degrees
Stabilizers and leveling security 30 degrees

Load Charts

On stabs, with forks, 90 degrees

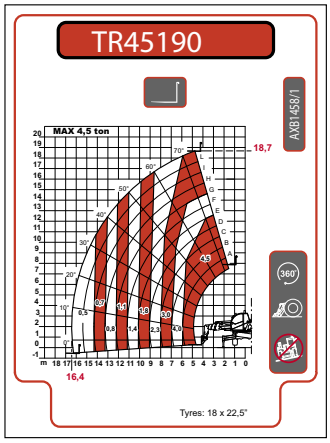

Dimensions

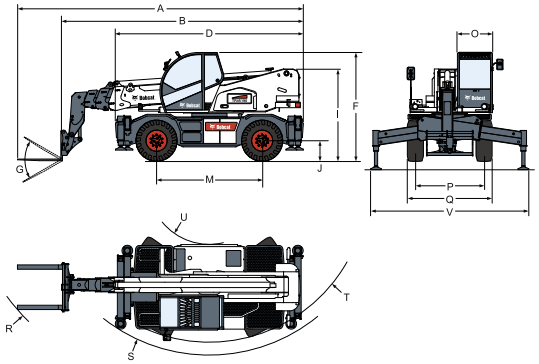

(A)	7910 mm	(G)	134°	(M)	2950 mm
(B)	6760 mm	(I)	2580 mm	(O)	980 mm
(D)	5250 mm	(J)	320 mm	(P)	1920 mm
(F)	3020 mm			(Q)	2380 mm
				(R)	6410 mm
				(S)	4790 mm
				(T)	4430 mm
				(U)	1700 mm

Bobcat

www.bobcat.eu

Specifications and design are subject to change without notice - Pictures of Bobcat units may show other than standard equipment.

©2010 BOBCAT B 4472920 EN (04-10)